ISSUE No & DATE	DETAILS OF CHANGE: MODIFICATION RECORD NUMBER. ECR NUMBER.
01 2.2.16	FOR DO. REFERENCE ONLY. NOT PRODUCTION ISSUED
02 31.3.16	RH DOOR UPDATED M141191 - AB
06 20.06.19	Oven runners replace handirack DO Ref drawing only M142264 MC

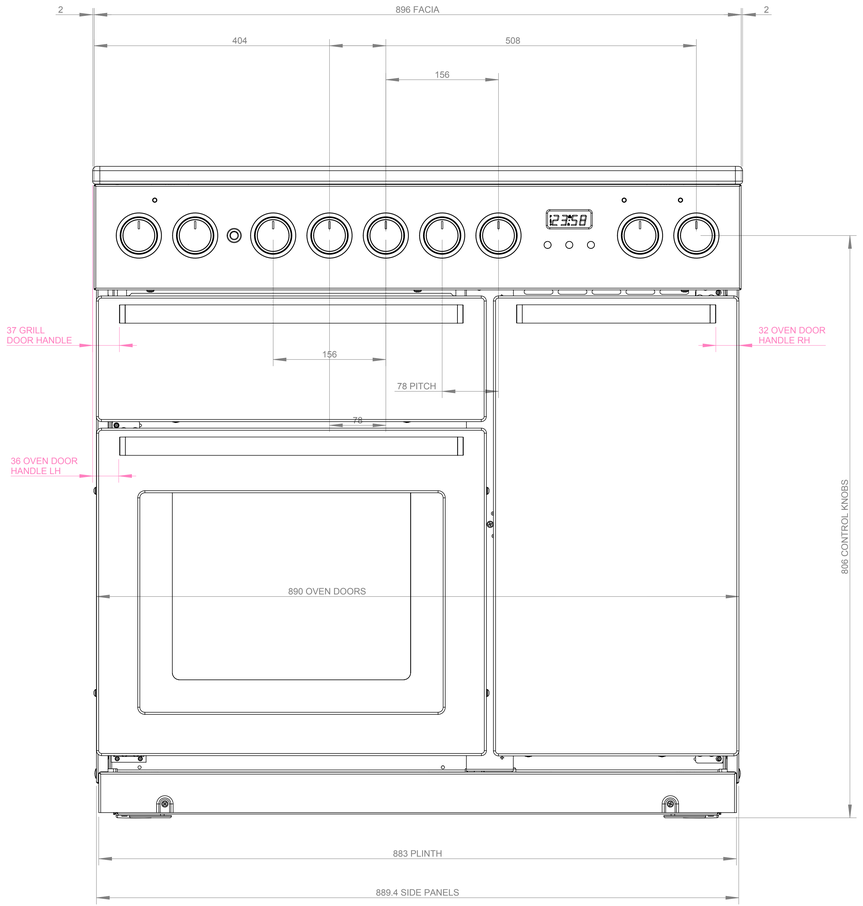

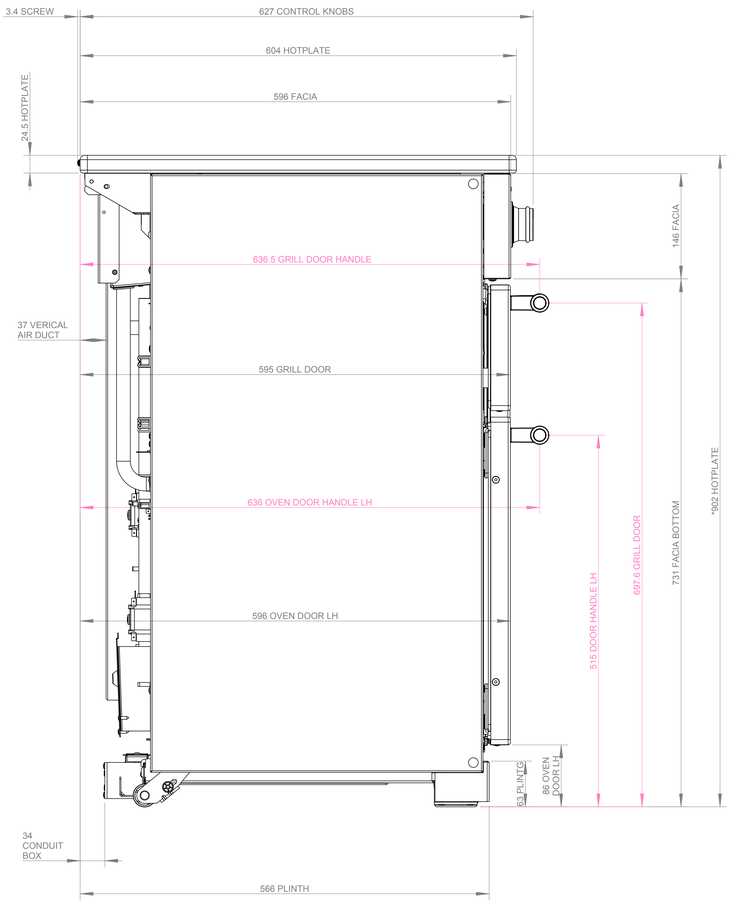

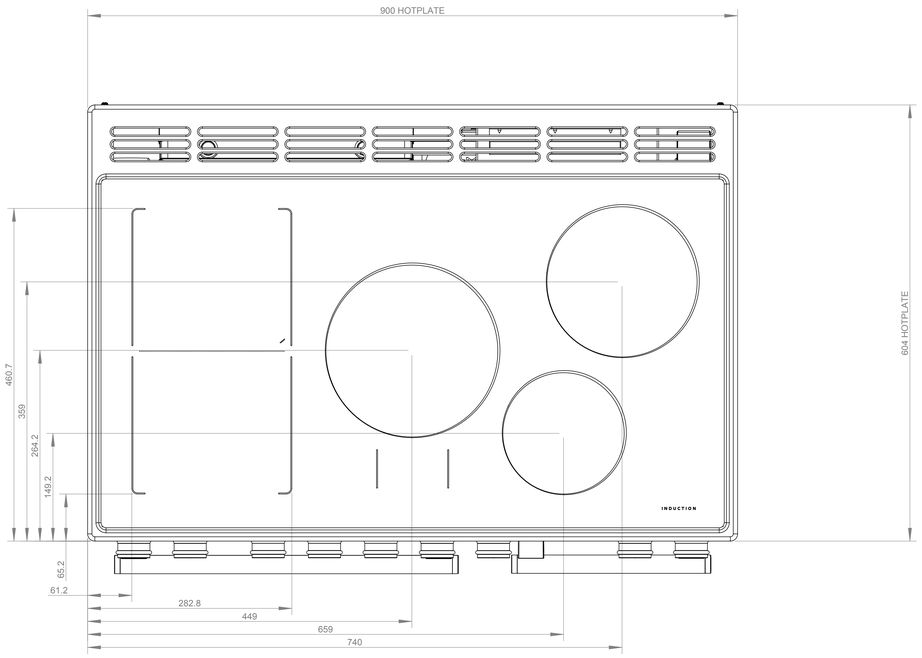

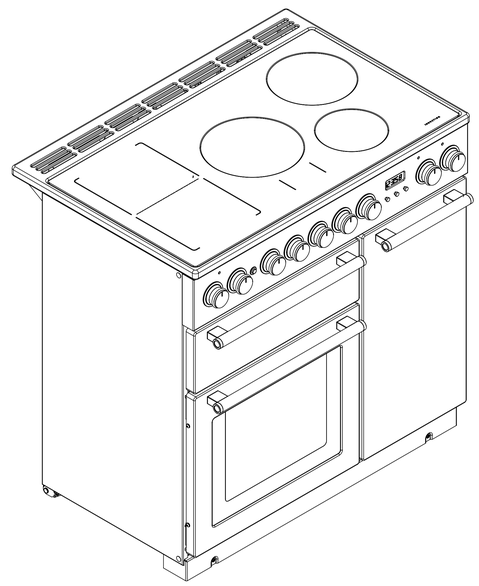

NOTES:

1. **ALL DIMENSIONS ARE NOMINAL AND ROUNDED TO THE NEAREST WHOLE NUMBER, UNLESS SHOWN OTHERWISE.**
2. **ALL HEIGHT DIMENSIONS ARE BASED ON THE COOKER BEING SET AT ITS LOWEST LEVEL (IE. *902 DIMENSION). THEY WILL CHANGE ACCORDINGLY WITH THE AMOUNT OF HEIGHT ADJUSTMENT.**
3. **FOR DOCUMENTATION PURPOSES THE COOKER IS HEIGHT ADJUSTABLE FROM 905 TO 930mm**
4. **THIS DRAWING IS FOR REFERENCE PURPOSES ONLY. A 'PDF' COPY OF THIS DRAWING FORMS PART OF THE 'APPLIANCE PRODUCT SPECIFICATION' HELD ON THE COMMON DRIVE. CHANGES TO THIS DRAWING REQUIRE THE 'PDF' FILE TO BE UPDATED.**

AGA RANGEmaster

Clarence Street, Royal Leamington Spa
Warwickshire CV31 2AD, United Kingdom
Telephone: 44 (0)1926 457400
Direct Fax: 44 (0)1926 457611
Web: www.agarangemaster.co.uk

DO NOT SCALE OR GUESS. IF IN DOUBT, ASK.
ALL MATERIALS MUST COMPLY WITH RoHS & REACH

ALL MACHINING TO BE FREE FROM BURRS, TOLERANCES UNLESS OTHERWISE STATED:-
ANGULAR ±30'
LINEAR DIMENSIONS: WHOLE NUMBERS ±0.5; ONE DECIMAL PLACE ±0.15
CIRCULAR HOLES ±0.15
CNC BEND RADII 1.25 -0 +1
CNC BEND ANGLES ±2°

ALL DIMENSIONS IN MILLIMETRES

PROJECTION

A0 DRAWING BORDER CREATED 01/08/2012 BY DJB

PLOT SCALE = 70%

MATERIAL AND FINISH SPECIFICATION

THIS DRAWING IS THE PROPERTY OF RANGEMASTER AND REPRODUCTION IN WHOLE OR PART MAY NOT BE MADE WITHOUT THEIR WRITTEN CONSENT.

DRAWN	PROJECT	ASSEMBLY
TAB	11202	
SCALE 1:3 & 1:5		

TITLE
NEXUS 90 INDUCTION BLACK AUSTRALIA

PART NUMBER
A0011202