ISSUE No & DATE	DETAILS OF CHANGE. MODIFICATION RECORD NUMBER. ECR NUMBER.
07 19.09.16	FOR REFERENCE ONLY - FOR PRODUCT ISSUE 07. MXXXXXX AWC
07A 26.10.16	DRAWING MODIFIED PICTORIALLY. ITEM1 WAS ISSUE 01 NOW 02. M141416 AWC

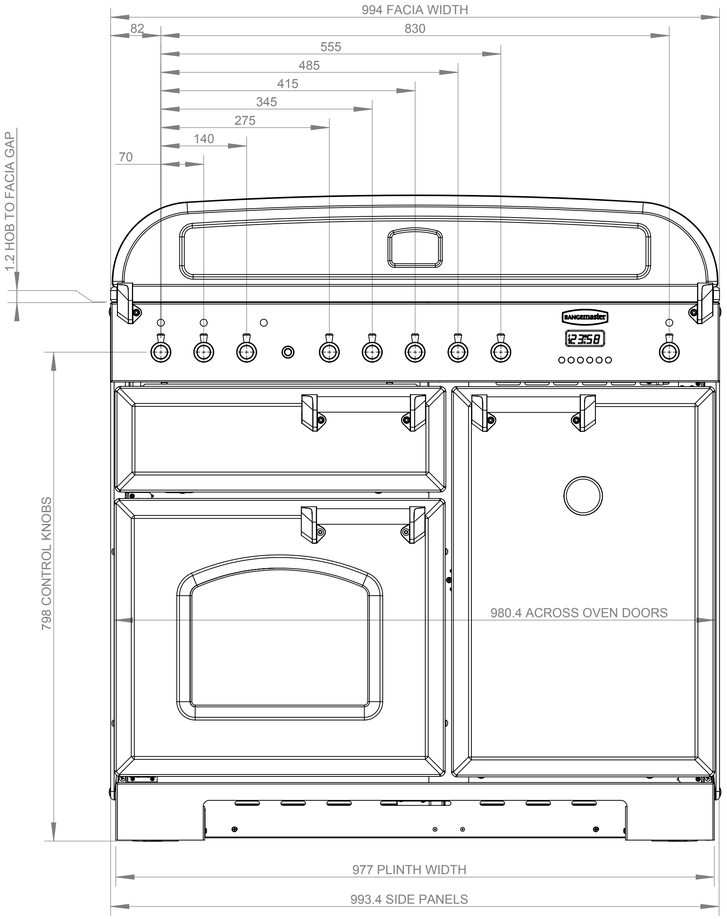

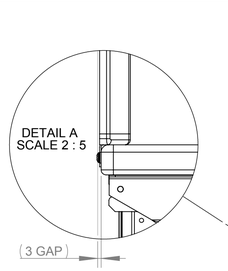

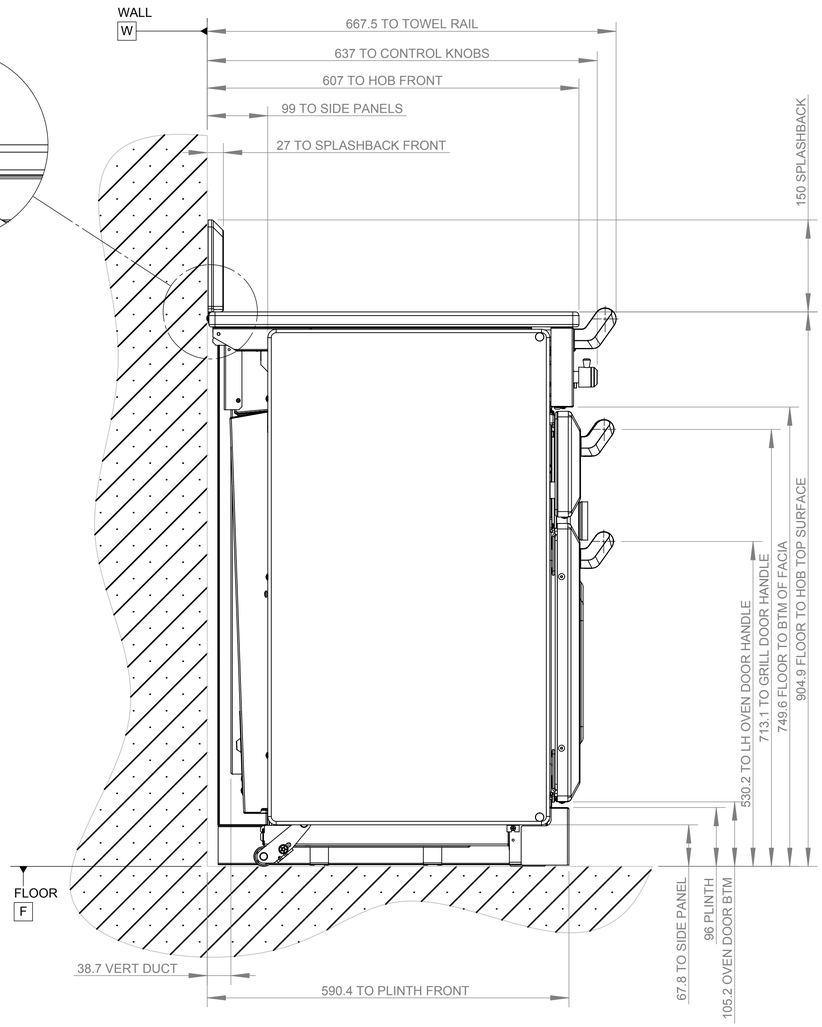

Single Level Listing

Assembly	: A009592		CDL 100 IND BLK/CHR	S.M. No.	:
Issue	: 07			Date	19.09.16

Ref Number	Part number	Revision	Description	Quantity	Remarks
001	A065141	02	CORE ASSY CDL 100 IND	1	
002	Q009592	02	DATA LABEL	1	
003	ID09592	02	IDENT LABEL	2	
004	A051586	01	HOTPLATE / INDUCTION UNIT ASSY 100	1	-
005	A065238	01	FACIA ASSY CDL 100 IND BLK/CHR	1	
006	A065236	01	DOOR SET CDL 100 BLK	1	
007	A065237	01	OVEN ACC CDL 100 IND/DF	1	
008	A065240	01	STYLING KIT CDL 100	1	
009	A034828	05	LABEL KIT CERAMIC	1	
010	A034462	01	INSTRUCTION PACK CDL 100 IND GB/IE	1	
011	A051868	03	SHRINK WRAP PACK CLASSIC DL 100 IND	1	-
012	A065804	01	SIDE SET 100 BLK	1	NO INSULATION
013	EA65187	01	OPTIONAL EXTRAS RM NEW BACK	1	

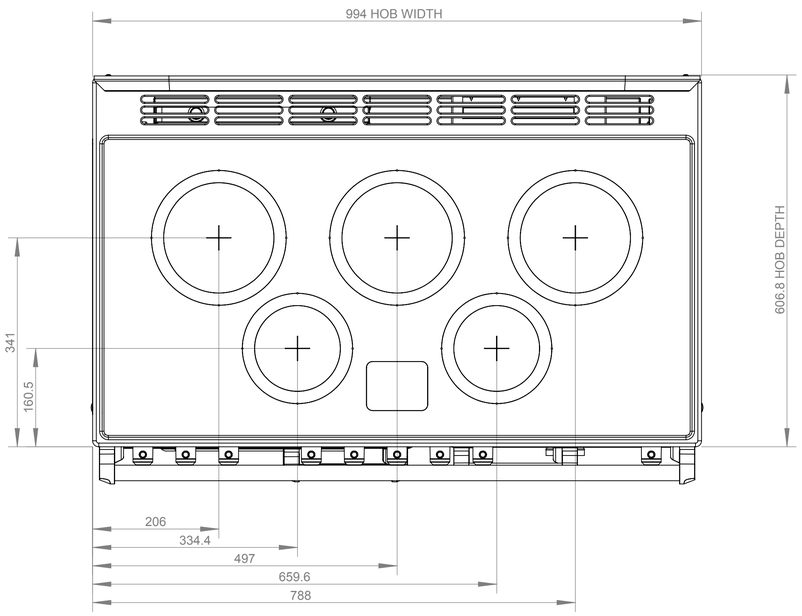

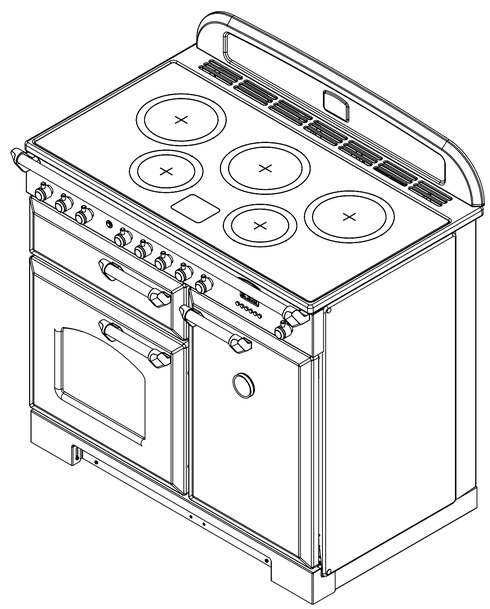

NOTES:

1. ALL DIMENSIONS ARE NOMINAL & ROUNDED TO THE NEAREST WHOLE NUMBER, UNLESS SHOWN OTHERWISE.
2. ALL HEIGHT DIMENSIONS ARE BASED ON THE COOKER BEING SET AT ITS LOWEST LEVEL (IE. *904.4 DIMENSION), THEY WILL CHANGE ACCORDINGLY WITH THE AMOUNT OF HEIGHT ADJUSTMENT.
3. FOR DOCUMENTATION PURPOSES THE COOKER IS HEIGHT ADJUSTABLE AS DETAILED IN OBP.
4. THIS DRAWING IS FOR REFERENCE PURPOSES ONLY. A 'PDF' COPY OF THIS DRAWING FORMS PART OF THE 'APPLIANCE PRODUCT SPECIFICATION' HELD ON THE 'COMMON' DRIVE. CHANGES TO THIS DRAWING REQUIRE THE 'PDF' FILE TO BE UPDATED.

AGA RANGEMASTER

Clarence Street, Royal Leamington Spa
Warwickshire CV31 2AD, United Kingdom
Telephone: 44 (0)1926 457400
Direct Fax: 44 (0)1926 457611
Web: www.agarangemaster.co.uk

DO NOT SCALE OR GUESS. IF IN DOUBT, ASK.
ALL MATERIALS MUST COMPLY WITH RoHS & REACH

ALL MACHINING TO BE FREE FROM BURRS.
TOLERANCES UNLESS OTHERWISE STATED:-
ANGULAR ±30'
LINEAR DIMENSIONS WHOLE NUMBERS ±0.5
ONE DECIMAL PLACE ±0.15
CIRCULAR HOLES ±0.15
CNC BEND RADII 1.25 +1 -0
CNC BEND ANGLES ±2°
ALL DIMENSIONS IN MILLIMETRES

PROJECTION

A1 DRAWING BORDER CREATED 01/08/2012 BY DJB

THIS DRAWING IS THE PROPERTY OF RANGEMASTER AND REPRODUCTION IN WHOLE OR PART MAY NOT BE MADE WITHOUT THEIR WRITTEN CONSENT.

DRAWN	PROJECT	ASSEMBLY
AWC	9592	
SCALE 1:10		

MATERIAL AND FINISH SPECIFICATION

SEE BOMS

TITLE

CDL INDUCTION 100 BLK/CHR

PART NUMBER

a009592

SHEET 1 OF 1